COG 113

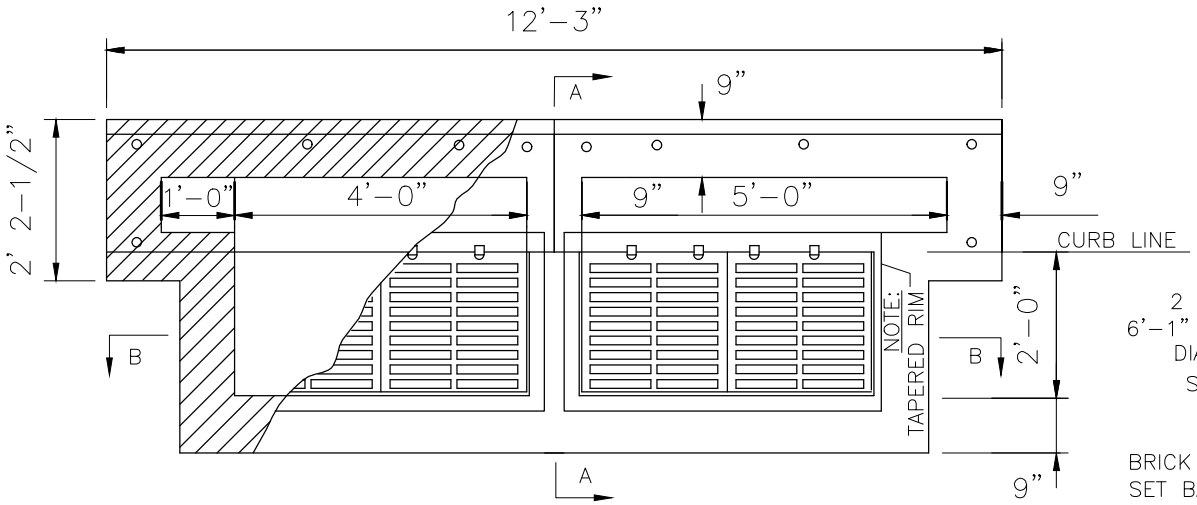

PLAN

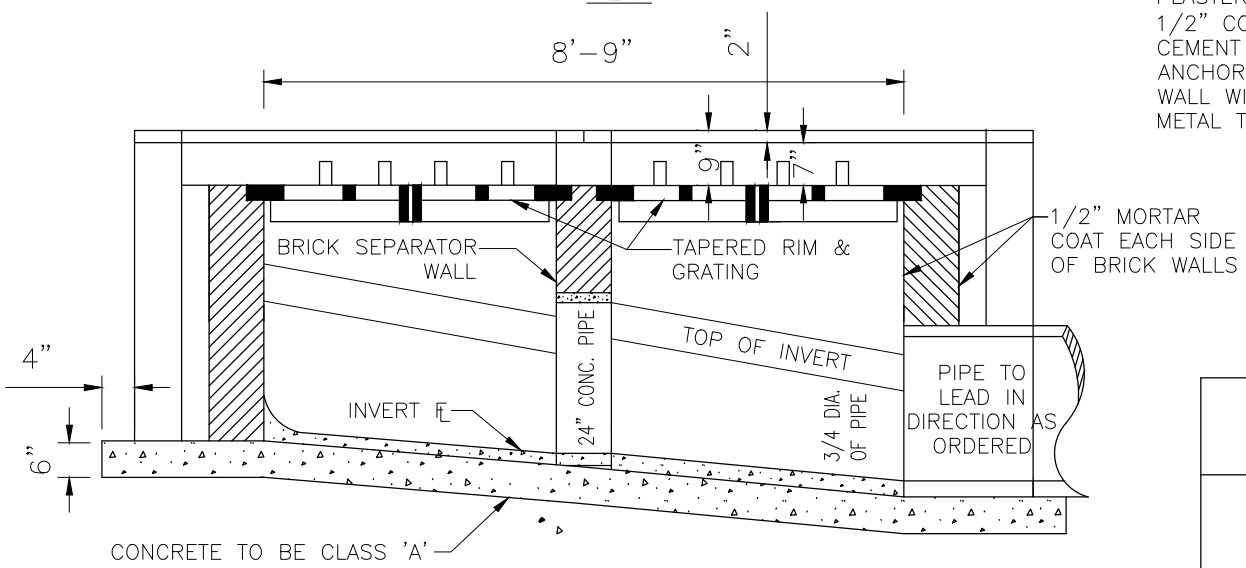

SECTION B-B

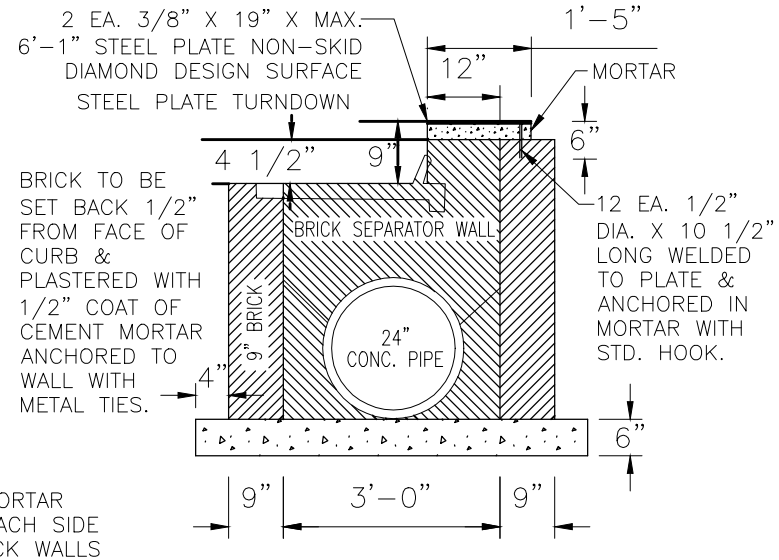

SECTION A-A

ENGINEERING DIVISION
CITY OF GERMANTOWN

TWIN 6-72 INLET

DRAWN:	COG	DATE:	01.15.10
CHECKED:	WRJ	REVISED:	
APPROVED:	CTG	SCALE:	NTS