COG 112

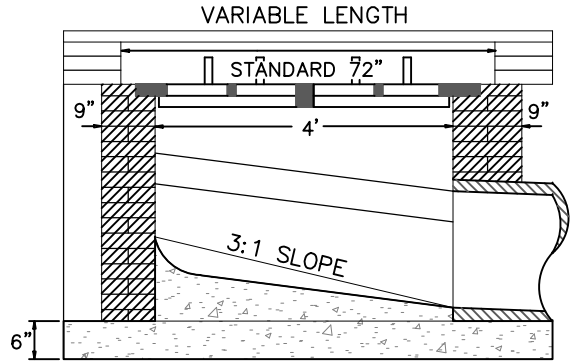

LONGITUDINAL SECTION

BRICK TO BE SETBACK 1/2" FROM FACE OF CURB AND PLASTERED WITH 1/2" COAT OF CEMENT MORTAR ANCHORED TO WALL WITH METAL TIES

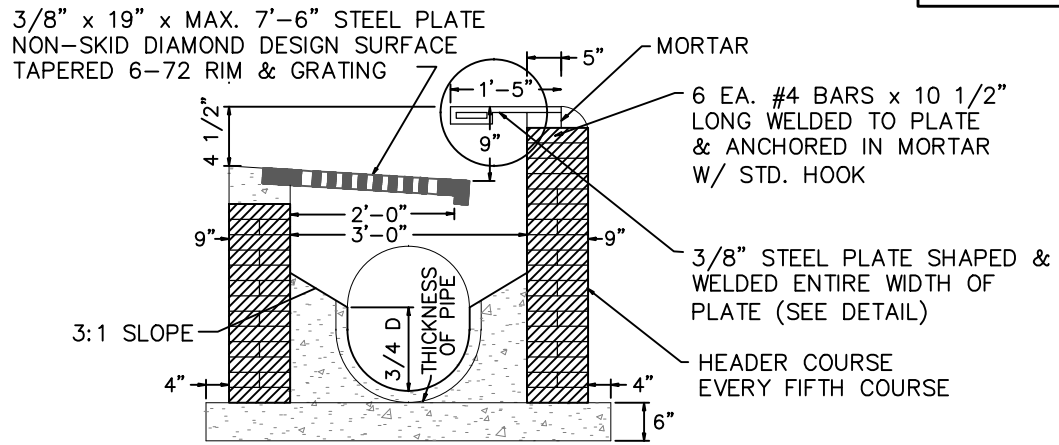

CROSS SECTION

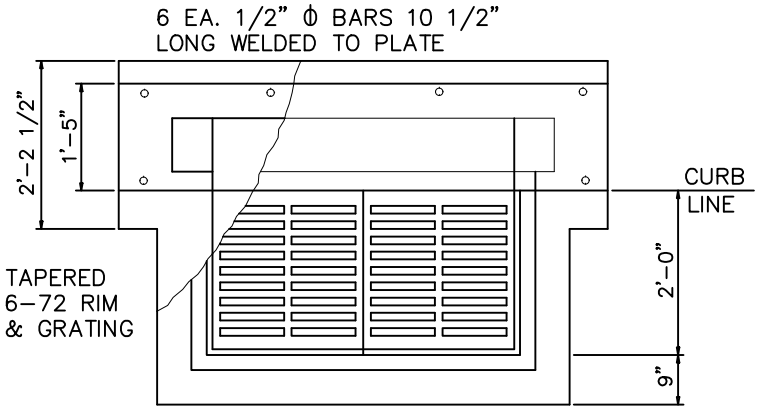

PLAN

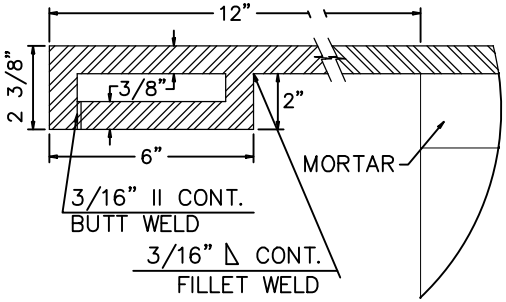

DETAIL

OPENING AREA OF INLETS		
LENGTH OF CURB OPENING	AREA OF CURB OPENING	TOTAL OPENING AREA OF INLET
48"	2.33 SQ. FT.	6.12 SQ. FT.
54"	2.62 SQ. FT.	6.41 SQ. FT.
60"	2.91 SQ. FT.	6.70 SQ. FT.
66"	3.20 SQ. FT.	6.99 SQ. FT.
72"	3.50 SQ. FT.	7.29 SQ. FT.
OPENING AREA OF #12 GRATING 3.79 SQ. FT.		

NOTE: STANDARD CURB OPENING IS 72"
VARIATIONS ONLY ON ORDER OF ENGINEER

CONC. TO BE 4000 PSI (6 BAG MIN.)

*NOTE: NEED TO SHOW TAPERED CURB

ENGINEERING DIVISION
CITY OF GERMANTOWN

6-72 CATCH BASIN

DRAWN:	COG	DATE:	01.15.10
CHECKED:	WRJ	REVISED:	
APPROVED:	CTG	SCALE:	NTS