COG 110

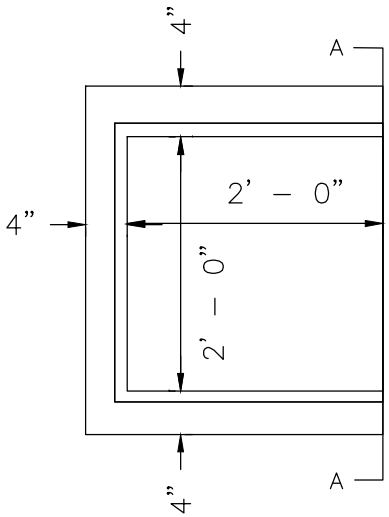

HALF RIM PLAN

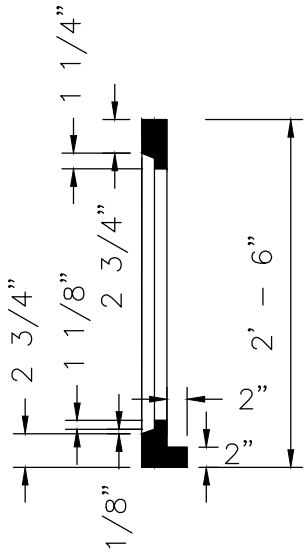

SECTION A–A

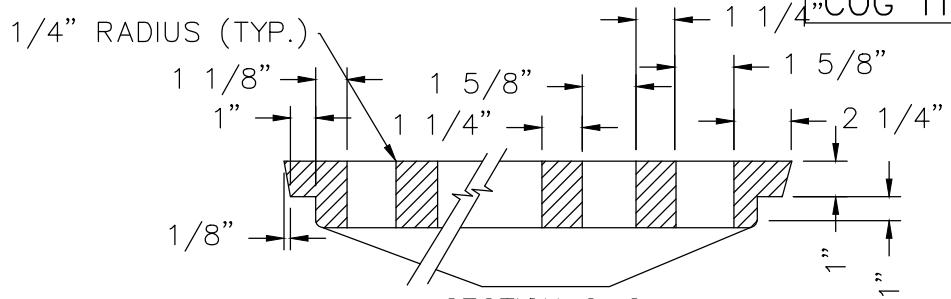

SECTION C–C

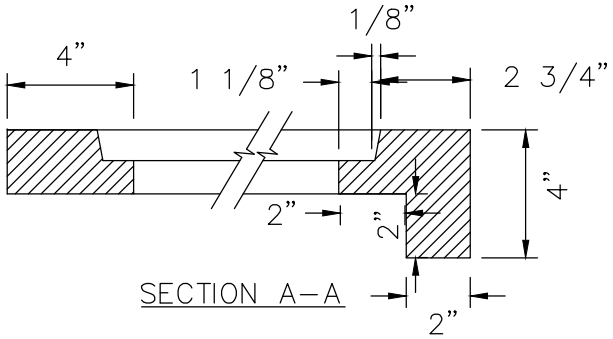

SECTION A–A

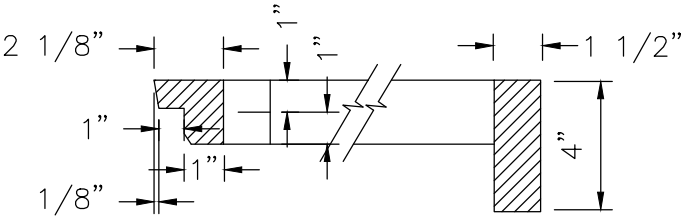

SECTION D–D

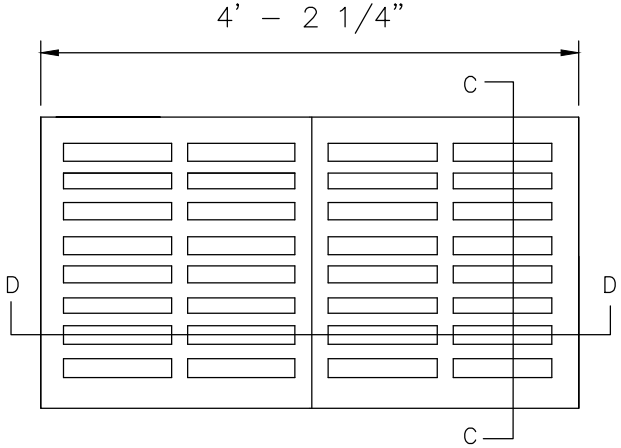

GRATING PLAN

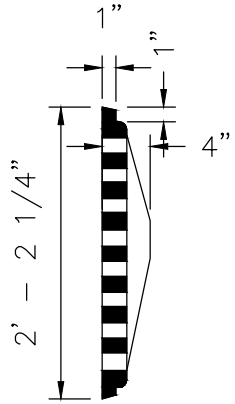

SECTION C–C

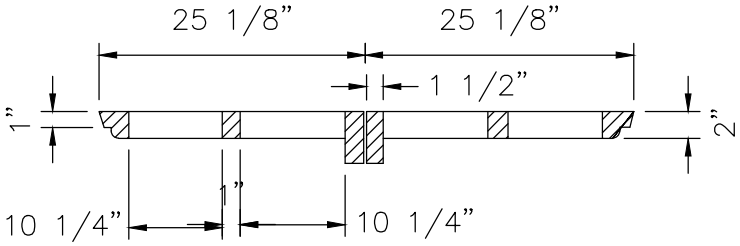

SECTION D–D

ENGINEERING DIVISION
CITY OF GERMANTOWN

STANDARD RIM AND GRATING #11

DRAWN:	COG	DATE:	01.15.10
CHECKED:	WRJ	REVISED:	
APPROVED:	CTG	SCALE:	NTS