COG 109

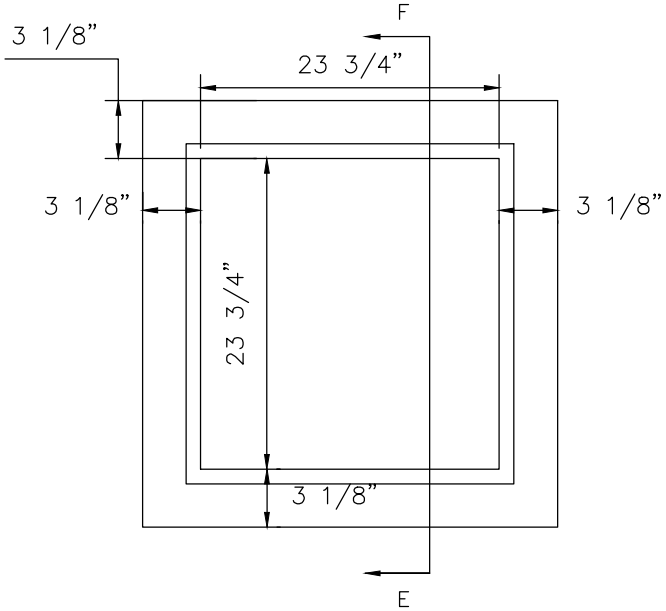

PLAN OF RIM

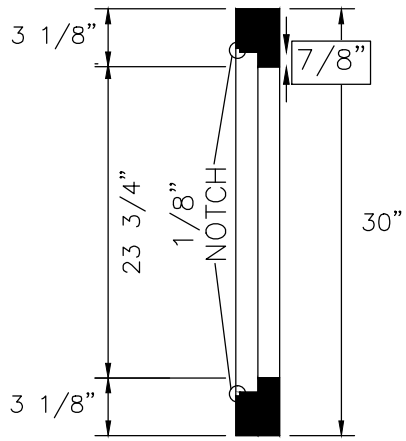

SECTION E–F

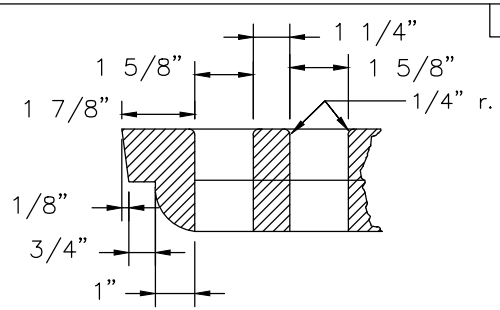

SECTION A–B

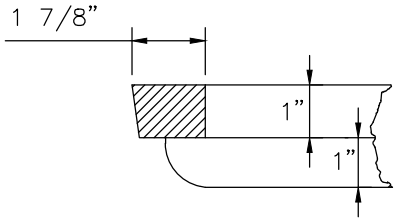

SECTION C–D

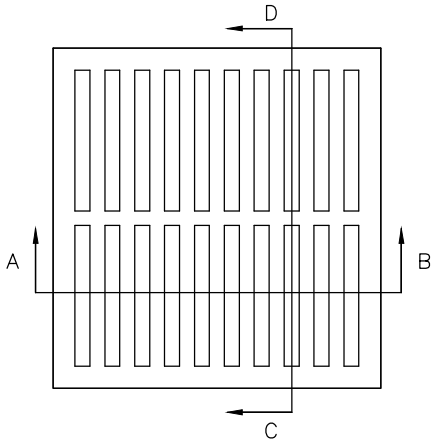

PLAN OF GRATING

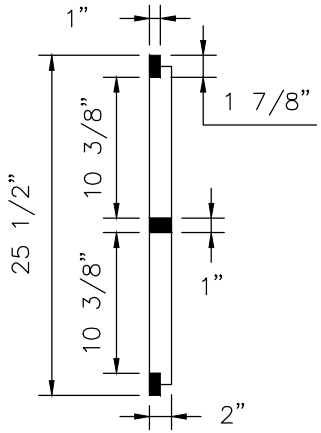

SECTION C–D

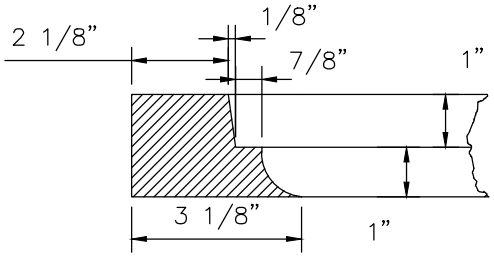

SECTION E–F

SECTION A–B

ENGINEERING DIVISION
CITY OF GERMANTOWN

RIM AND GRATING #10

DRAWN:	COG	DATE:	01.15.10
CHECKED:	WRJ	REVISED:	
APPROVED:	CTG	SCALE:	NTS