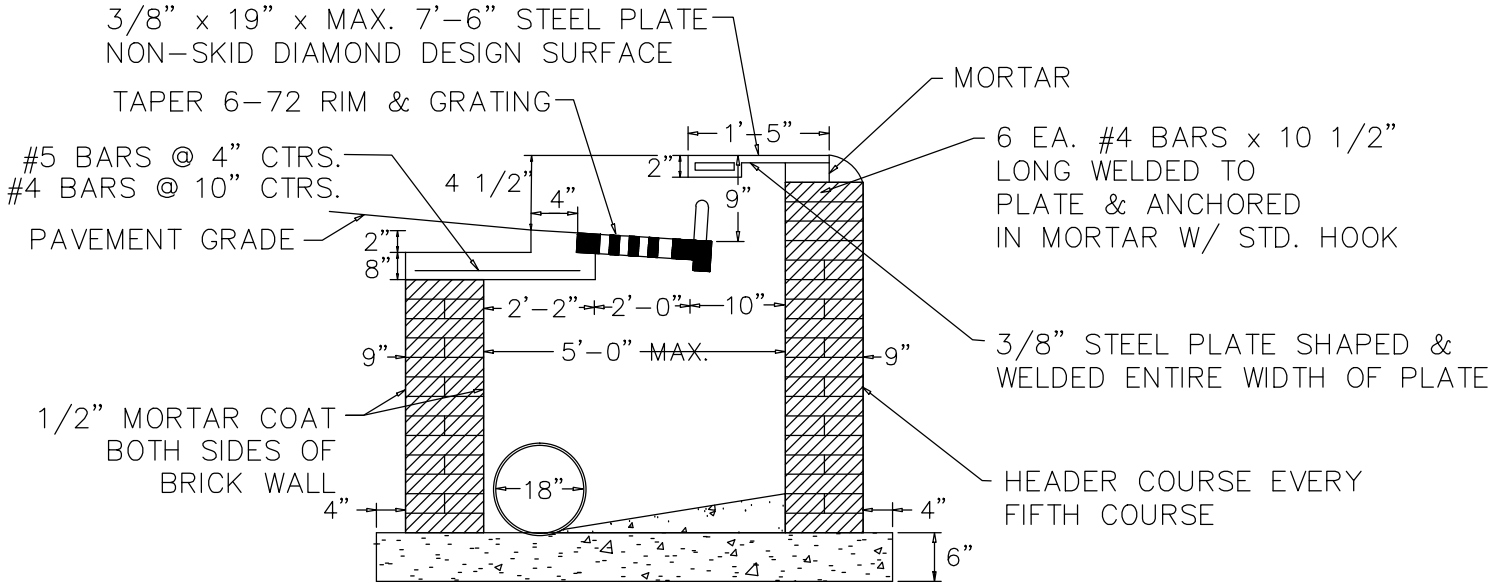

CROSS SECTION

ENGINEERING DIVISION
CITY OF GERMANTOWN

DESIGN STANDARD
FOR
MODIFIED TYPE 6-72 INLET

DRAWN:	COG	DATE:	01.15.10
CHECKED:	WRJ	REVISED:	
APPROVED:	CTG	SCALE:	NTS