COG 103

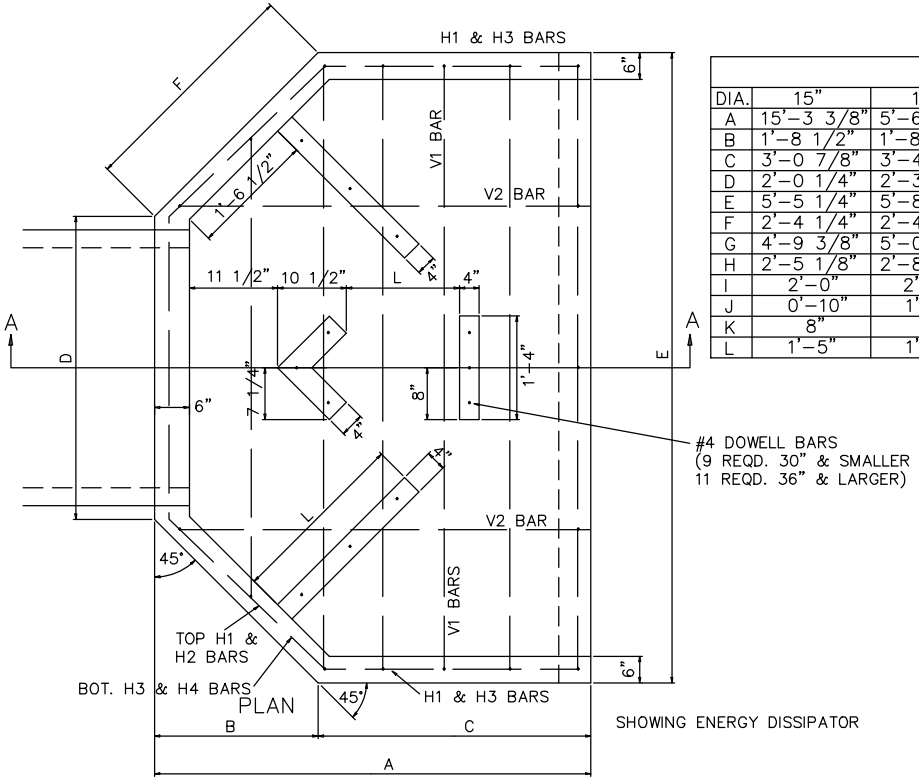

SHOWING ENERGY DISSIPATOR

TABLE OF DIMENSIONS AND DIAMETERS										
DIA.	15"	18"	21"	24"	30"	36"	42"	48"	54"	60"
A	15'-3 3/8"	5'-6 3/4"	5'-6 3/4"	5'-7 1/2"	5'-9"	7'-4 1/2"	9'-0"	9'-1 1/2"	10'-9"	12'-6"
B	1'-8 1/2"	1'-8 1/4"	1'-8 1/2"	1'-8 1/2"	1'-9"	1'-9"	1'-9"	1'-9"	1'-9"	1'-9"
C	3'-0 7/8"	3'-4 1/4"	3'-10 1/4"	3'-11"	4'-0"	5'-7 1/2"	7'-3"	7'-4 1/2"	9'-0"	10'-9"
D	2'-0 1/4"	2'-3 1/2"	2'-6 1/2"	2'-10"	3'-5"	4'-0"	4'-7"	5'-2"	5'-9"	6'-5"
E	5'-5 1/4"	5'-8 1/2"	5'-11 1/2"	6'-3"	6'-11 1/4"	7'-6"	8'-1"	8'-8"	9'-3"	9'-11"
F	2'-4 1/4"	2'-4 1/4"	2'-4 1/4"	2'-4 1/4"	2'-5 11/16"	2'-5 11/16"	2'-5 11/16"	2'-5 11/14"	2'-5 11/14"	2'-5 11/16"
G	4'-9 3/8"	5'-0 3/4"	5'-0 3/4"	5'-11 1/2"	5'-3"	6'-10 1/2"	8'-6"	8'-7 1/2"	10'-3"	12'-0"
H	2'-5 1/8"	2'-8 1/4"	2'-11 1/2"	3'-2 1/2"	3'-9"	4'-3 1/2"	4'-10"	5'-4 1/2"	5'-11"	6'-6"
I	2'-0"	2'-0"	2'-0"	2'-0"	2'-0"	3'-0"	3'-0"	3'-0"	3'-0"	3'-0"
J	0'-10"	1'-0"	1'-3"	1'-6"	2'-0"	2'-0"	2'-0"	2'-6"	2'-6"	2'-6"
K	8"	8"	8"	8"	1'-0"	1'-0"	1'-0"	1'-0"	1'-3"	1'-3"
L	1'-5"	1'-6"	1'-7"	1'-9"	2'-2"	2'-2"	2'-5"	2'-6"	2'-9"	3'-0"

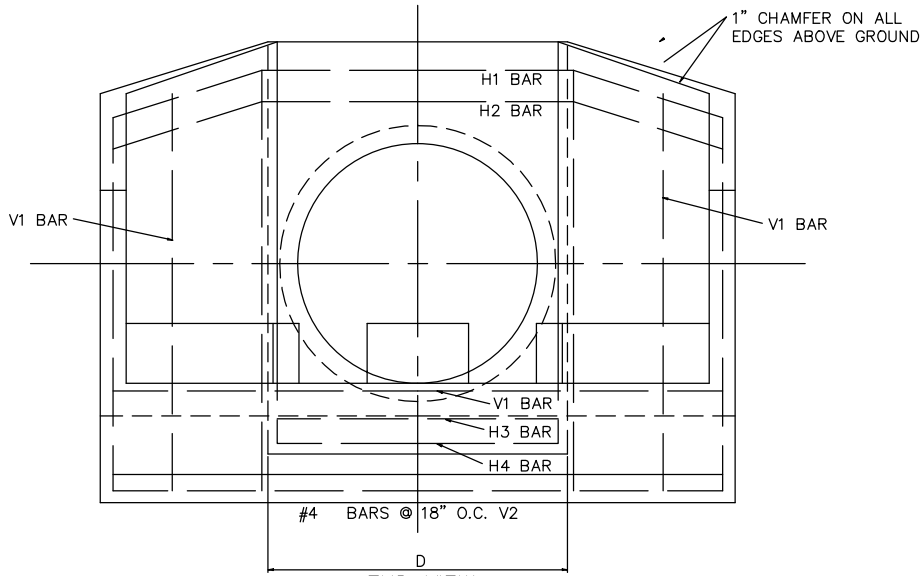

END VIEW

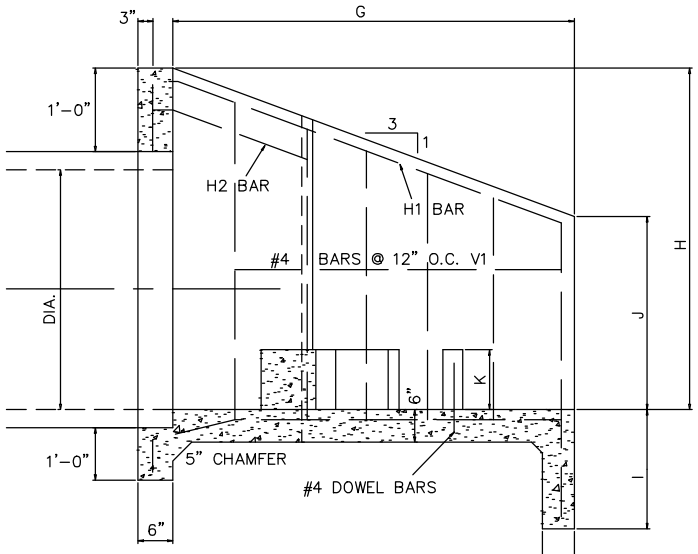

SECTION A-A

NOTE: Precast Structures must be Pre-Approved by the City Engineer

ENGINEERING DIVISION
CITY OF GERMANTOWN

DESIGN STANDARD
FOR
TYPE "E" HEADWALL

DRAWN:	COG	DATE:	01.15.10
CHECKED:	WRJ	REVISED:	
APPROVED:	CTG	SCALE:	NTS