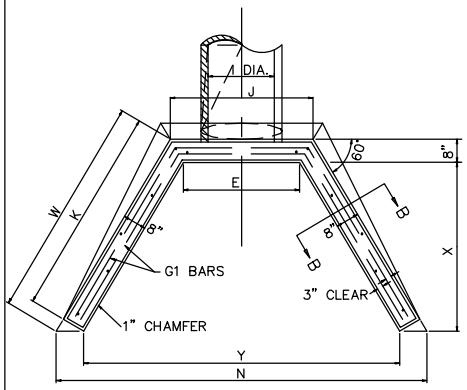

PLAN
INLET

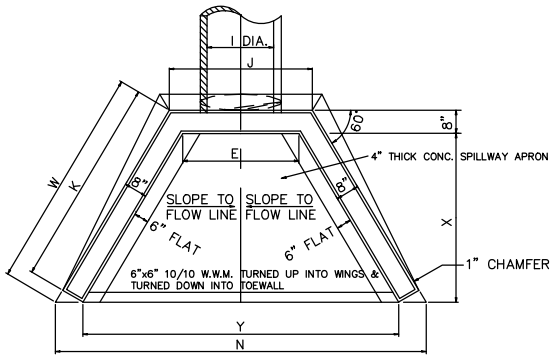

PLAN
OUTLET

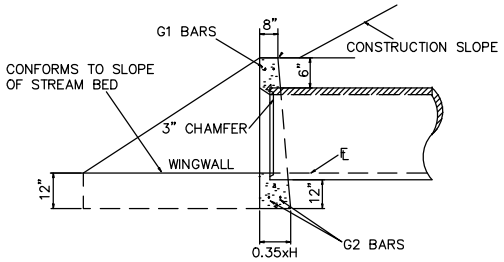

INLET

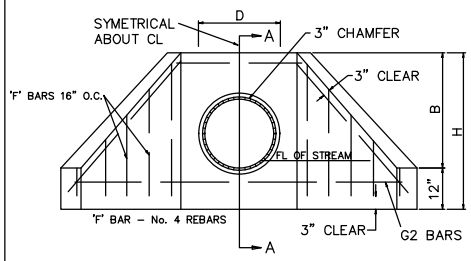

ELEVATION
INLET

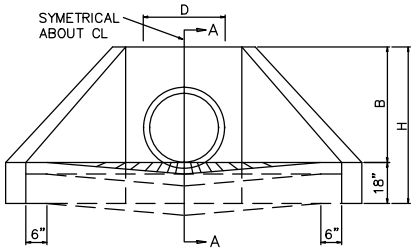

ELEVATION
OUTLET

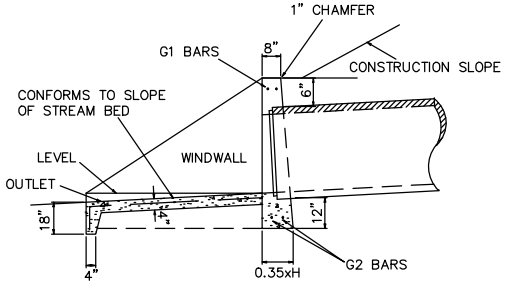

OUTLET

SECTION A–A

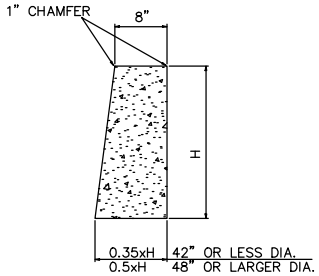

SECTION B–B
WINGWALL SECTION

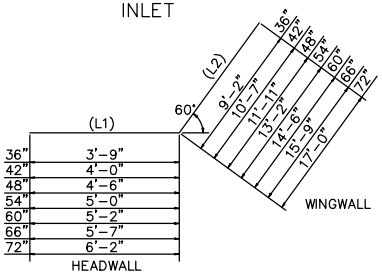

G1 & G2 BARS

NOTE: Precast Structures must be Pre–Approved by the City Engineer

NOTE: RIGHT WINGS LOOKING INTO PIPE, LEFT WING OPPOSITE HAND

CONCRETE TO BE 3000 PSI (6 BOG MIN.)

NO.4 REBARS

TABLE OF DIMENSIONS AND DIAMETERS

DIA.	15"	18"	21"	24"	30"	36"	42"	48"	54"	60"	66"	72"
B	1'–11 1/2"	2'–2 1/4"	2'–5 1/4"	2'–8 1/2"	3'–3"	3'–9 1/2"	4'–4"	4'–10 1/2"	5'–5"	6'–0"	6'–6 1/2"	7'–1"
D	1'–7 1/4"	1'–10 1/2"	2'–1 1/2"	2'–5"	3'–0"	3'–7"	4'–2"	4'–9"	5'–4"	6'–0"	6'–7"	7'–2"
E	1'–9 1/4"	2'–0 1/2"	2'–3 1/2"	2'–7"	3'–2"	3'–9"	4'–4"	4'–10"	5'–6"	6'–2"	6'–9"	7'–4"
H	3'–1 1/4"	3'–4 1/2"	3'–7 1/2"	3'–11"	4'–6"	5'–1"	5'–8"	6'–3"	6'–10"	7'–6"	8'–1"	8'–8"
J	2'–7 5/8"	2'–10 7/8"	3'–1 7/8"	3'–5 3/8"	4'–0 3/8"	4'–10 5/8"	5'–2 3/8"	5'–9 3/8"	6'–4 3/8"	7'–0 3/8"	7'–7 3/8"	8'–2 3/8"
K	4'–10 5/8"	5'–5 3/4"	6'–0 5/8"	6'–8 1/4"	7'–11 1/4"	9'–2 1/4"	10'–5 1/4"	11'–8 1/4"	12'–11 1/4"	14'–3 1/2"	15'–6 1/2"	16'–9 1/2"
N	7'–11 1/2"	8'–9 7/8"	9'–7 7/8"	10'–6 7/8"	12'–4 7/8"	14'–2 7/8"	16'–0 7/8"	17'–10 7/8"	19'–8 7/8"	21'–9 1/8"	23'–7 1/8"	25'–5 1/8"
W	5'–3 3/4"	5'–11"	6'–5 7/8"	7'–1 1/2"	8'–4 1/2"	9'–7 1/2"	10'–10 1/2"	12'–1 1/2"	13'–4 1/2"	14'–8 5/8"	15'–11 5/8"	17'–2 5/8"
X	3'–10 1/4"	4'–4 1/2"	4'–10 1/2"	5'–5"	6'–6"	7'–7"	8'–8"	9'–9"	10'–10"	12'–0"	13'–1"	14'–2"
Y	6'–2 5/8"	7'–1 1/8"	7'–11"	8'–10 1/2"	10'–8 1/2"	12'–6 1/2"	14'–4 1/8"	16'–2 1/8"	18'–0 1/8"	20'–0 1/4"	21'–10 1/4"	23'–8 1/4"

THIS TABLE OF DIMENSIONS IS FOR 2:1 CONSTRUCTION SLOPE

ENGINEERING DIVISION
CITY OF GERMANTOWN

DESIGN STANDARD
FOR
TYPE "D" HEADWALL
WITH WINGWALLS

DRAWN:	COG	DATE:	01.15.10
CHECKED:	WRJ	REVISED:	
APPROVED:	CTG	SCALE:	NTS